QUESTO DISEGNO E' DI PROPRIETA' DELLA DITTA FIORTECH E NON PUO' ESSERE USATO, E/O CEDUTO A TERZI SENZA IL PERMESSO SCRITTO DELLA FIORTECH

THIS DRAWING IS THE PROPERTY OF FIORTECH FACTORY AND IT CAN NOT BE USED, REPRODUCED AND OR LOANED TO THIRD PARTIES WITHOUT THE WRITTEN PERMISSION OF FIORTECH

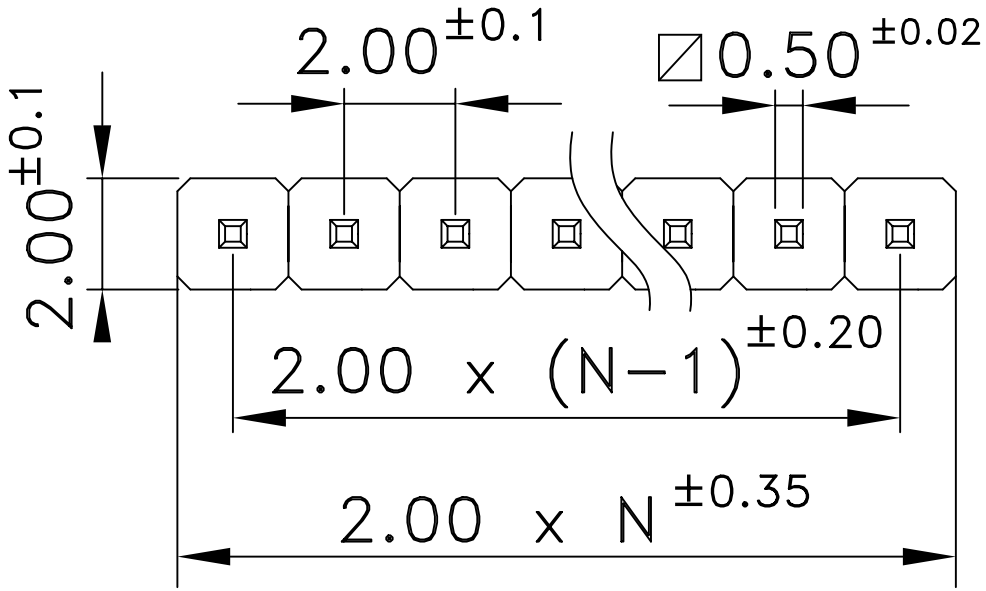

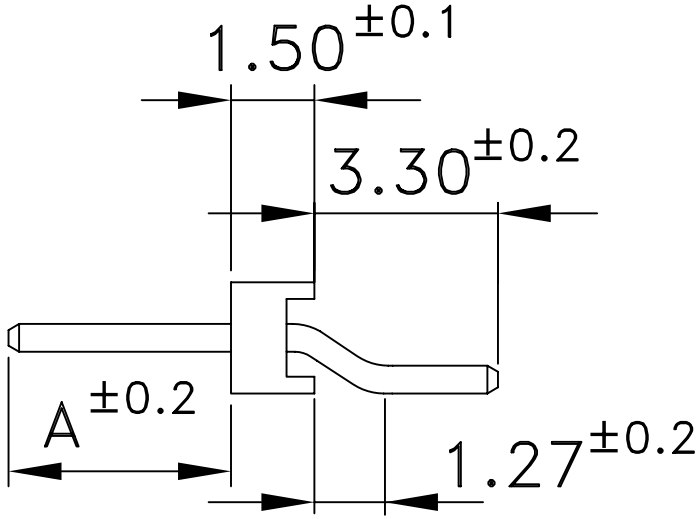

(XX) = N = number of contacts between 02 and 40

CM−200−H−1x (XX) −1− (YY) − A

Put the desired dimension for A in mm unit

Recommended PCB layout (Tolerance ±0.05)

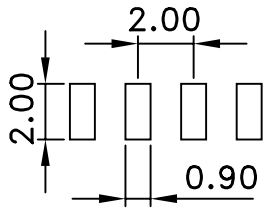

Plating:

(YY) = FG = gold flash (standard)
(YY) = G1 = gold 0.12µm
(YY) = G2 = gold 0.25µm
(YY) = G3 = gold 0.50µm
(YY) = G4 = gold 0.75µm
(YY) = TF = pure tin flash
(YY) = T1 = pure tin 5µm
(YY) = FS = selective gold flash
(YY) = S1 = selective gold 0.12µm
(YY) = S2 = selective gold 0.25µm
(YY) = S3 = selective gold 0.50µm
(YY) = S4 = selective gold 0.75µm

UNIT:mm

ELECTRICAL PROPERTIES
Current rate: 1 Ampère
Insulation resistance: 5000MΩ min.
Contact resistance: 20mΩ max.
Dielectric Voltage: 500V AC for 1 minute

MECHANICAL PROPERTIES
Operating temperature: −40°C ÷ +105°C
Peak temperature: 160° for 5÷10 sec

INDEX	DATE	MODIFICATION OCCURRED	VISA
–	–	–	

TOLERANCES FOR FREE DIMENSIONS

ANGULAR VALUES ±2°	FROM 0.5 TO 3.0	FROM >3.0 TO 6.0	FROM >6.0 TO 10.0	FROM >10.0 TO 18.0	FROM >18.0 TO 30.0	FROM >30.0 TO 50.0	FROM >50.0 TO 80.0	FROM >80.0 TO 120.0	FROM >120.0 TO 180.0	FROM >180.0 TO 250.0	FROM >250.0 TO 315.0
	±0.125	±0.150	±0.180	±0.215	±0.260	±0.310	±0.370	±0.435	±0.500	±0.575	±0.650

Material: Pin: copper alloy; Insulator: Nylon 6T (UL94V0)

Plating: See table

Notes: --
--

Scale: _____

Date of creation: 16−02−06

Designer: Chiappini R.

Part number: CM−200−H−1x (XX) −1− (YY) − A

Drawing number: ------
Index: ------
File: ------

Description: Single row horizontal SMD male connector pitch 2.00mm

Fiortech